StructEye : LoRa-Based Structural Health Monitoring System

Introduction

Structural Health Monitoring (SHM) is essential for ensuring the safety and reliability of buildings and infrastructure. Over time, structures may develop weaknesses due to environmental conditions, aging, or unexpected external forces such as vibrations and impacts. Detecting these issues at an early stage can help prevent serious damage or failure.

This project presents a smart and cost-effective SHM system that monitors structural vibrations and detects abnormal conditions using embedded sensors and wireless communication. The system focuses on identifying critical events rather than continuous monitoring, making it efficient and suitable for real-world deployment.

Problem Statement

Buildings are subjected to vibrations and external forces that can lead to structural damage over time. Existing structural health monitoring systems often rely on continuous monitoring and complex processing techniques, making them costly and power-intensive. Additionally, many systems fail to detect sensor tilt, which can result in inaccurate readings. Therefore, there is a need for a simple, low-cost, and energy-efficient system that can detect abnormal vibrations and tilt while providing reliable wireless alert for structural safety.

Project Overview

This project proposes a wireless, distributed Structural Health Monitoring (SHM) system using multiple sensor nodes deployed at different locations of a building. Each node is equipped with an MPU6050 sensor, STM32F446RE microcontroller, and LoRa communication module (SX1278).

The system measures:

- Structural vibration using the accelerometer
- Structural tilt using the gyroscope

Unlike conventional systems, this project follows an **event-driven (interrupt-based) approach** instead of continuous monitoring. When the sensed vibration exceeds a predefined threshold, an interrupt is triggered, and the system activates to capture and process the data.

The collected data is processed locally at each node using threshold-based analysis to determine whether the condition is normal or abnormal. If a critical condition such as excessive vibration or tilt is detected, the node transmits an alert wirelessly to a central receiver using LoRa communication.

This approach reduces power consumption, simplifies processing by avoiding complex techniques like FFT, and enables efficient real-time monitoring of structural conditions.

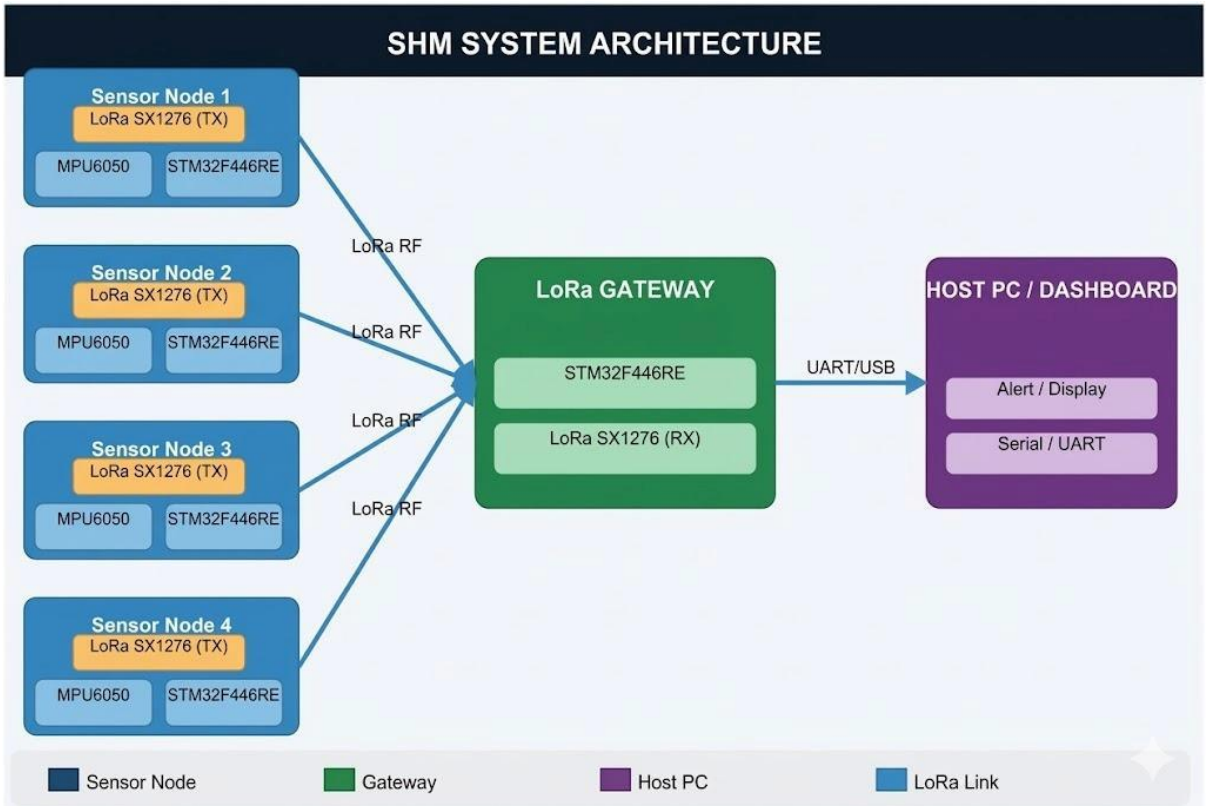

Proposed Solution

This project presents a wireless structural health monitoring system using distributed sensor nodes. Each node measures vibration and tilt using the MPU6050 sensor and processes the data using an STM32 microcontroller. The processed information is transmitted via LoRa to a central receiver, where the structural condition is monitored in real time.

The system identifies potential structural issues by detecting abnormal vibration levels and tilt, enabling early warning and preventive maintenance.

• **MPU6050 Sensor:** Measures vibration (acceleration) and tilt (angular motion) of the structure.

• **STM32F446RE Microcontroller:** Processes sensor data and performs threshold-based analysis to detect abnormal conditions.

• **LoRa Communication (SX1278):** Transmits alert data wirelessly from sensor nodes to the receiver.

• **Receiver Unit (STM32/ESP32 + LoRa):** Receives data from all nodes and displays system status.

• **Damage Detection Logic:** Detects abnormalities based on excessive vibration and tilt.

• **Output:** Displays system status (OK / NOT OK) for early warning and maintenance.

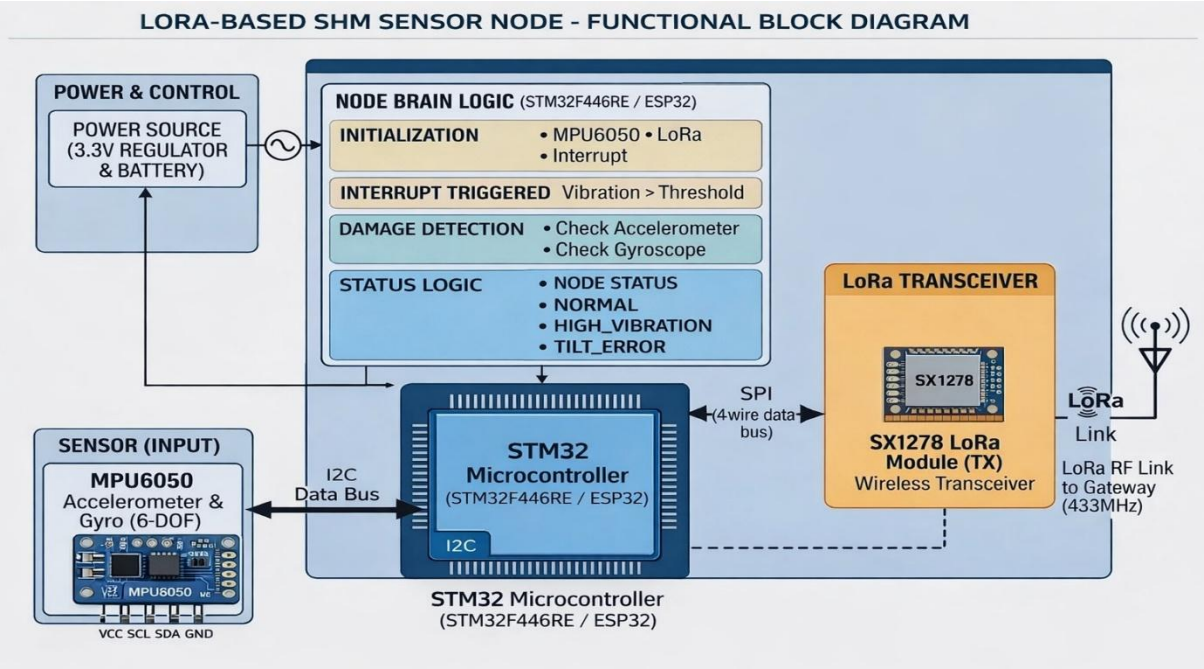
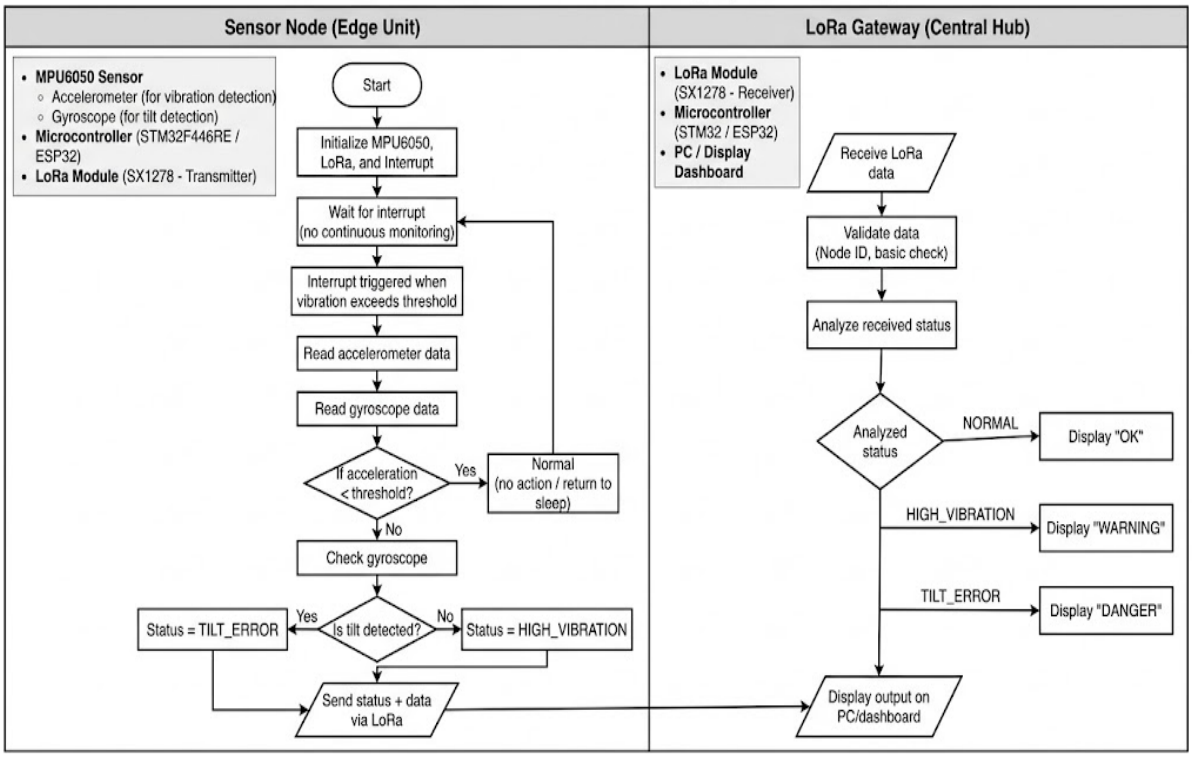
LoRa-Based Structural Health Monitoring System 'StructEye'